# SPECIFICATION

## MX-B70FM40-IHL49H

**For Customer's Acceptance:**

| Approved By | Comment |
|---|---|
| | |

| PREPARED | CHECKED | VERIFIED BY QA DEPT | VERIFIED BY R&D DEPT |
|---|---|---|---|
| | | | |

## Document Revision History

| Change No. | Date | Subject And Reason | Version No. | Responser |
|---|---|---|---|---|
| 1 | 2021.08.17 | First Release | 00 | |
| | | | | |
| | | | | |
| | | | | |
| | | | | |
| | | | | |
| | | | | |
| | | | | |
| | | | | |
| | | | | |
| | | | | |
| | | | | |
| | | | | |
| | | | | |
| | | | | |
| | | | | |

# 1.0 General Description

## 1.1 Introduction

MX-B70FM40-IHL49H is a color active matrix thin film transistor (TFT) liquid crystal display (LCD) that uses amorphous silicon TFT as a switching device. This model is composed of a TFT LCD panel and a driving circuit.This TFT LCD has a 7.0 inch diagonally measured active display area with (1200 horizontal by1920 vertical pixe l) resolution.

## 1.2. Features

7 inch configuration
ROHS design

## 1.3. General information

| Item | Specification | Unit |
|---|---|---|
| Outline Dimension | 105.46(H) x162.82(V) x2.4(D) | mm |
| Display area | 94.5 (H) x151.2 (V) | mm |
| Number of Pixel | 1200RGB (H) x 1920 (V) | pixels |
| Pixel pitch | 78.75 x 78.75 | mm |
| Pixel arrangement | RGB Vertical stripe | |
| Display mode | Normally Black | |
| Color Filter Array | RGB vertical stripes | |
| Backlight | White LED | |
| Weight | TBD | g |
| Data Transfer | MIPI | |

## 2.0 Absolute Maximum Ratings

### 2.1 Environment Absolute Rating

| Item | Symbol | Min. | Max. | Unit | Note |
|---|---|---|---|---|---|
| **Operating Temperature** | Topa | -20 | 60 | ℃ | |
| **Storage Temperature** | Tstg | -30 | 70 | ℃ | |

### 2.2 Back-light Unit:

| PARAMETER | Sym. | Min. | Typ. | Max. | Unit | Test Condition | Note |
|---|---|---|---|---|---|---|---|
| **LED Current** | IF | – | 210 | 240 | mA | – | – |
| **LED Voltage** | VF | | 30 | 31 | V | – | – |
| **Life Time** | | – | 30000 | – | Hr. | I≦560mA | – |
| **Color** | White | | | | | | |

Note (1) Permanent damage may occur to the LCD module if beyond this specification. Functional operation should be restricted to the conditions described under normal operating conditions.

(2)Ta=25±2℃

(3)Test condition: LED Current 560mA

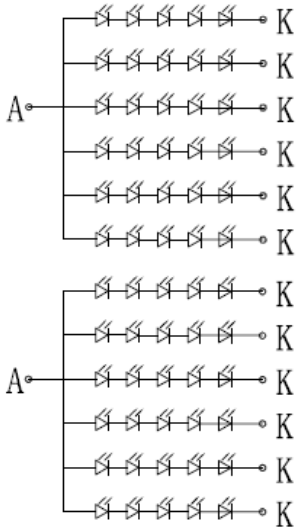

## 3.0 Optical Characteristics

### 3.1 Optical specification

| Item | Symbol | Condition | Values | | | Unit | Remark |
|---|---|---|---|---|---|---|---|
| | | | Min. | Typ. | Max. | | |
| Viewing angle (CR≥ 10) | $\theta_L$ | Φ=180° (9 o'clock) | 70 | 80 | - | degree | Note 1 |
| | $\theta_R$ | Φ=0° (3 o'clock) | 70 | 80 | - | | |
| | $\theta_T$ | Φ=90° (12 o'clock) | 70 | 80 | - | | |
| | $\theta_B$ | Φ=270° (6 o'clock) | 70 | 80 | - | | |
| Response time Rise+Fall | $T_{RT}$ | Normal θ=Φ=0° | - | 25 | 35 | Ms | Note 3 |
| Contrast ratio | CR | | 1200 | 1400 | - | - | Note 4 |
| Color chromaticity | $W_X$ | | | 0.281 | 0.31 | - | Note 2/5/6 |
| | $W_Y$ | | | 0.32 | 0.37 | - | |
| Luminance | L | | 1600 | 2000 | - | cd/m2 | Note 4 |
| Luminance uniformity | $Y_U$ | 9 AVG | 80 | 85 | - | % | Note7 |

### 3.2 Measuring Condition

- Measuring surrounding : dark room
- Ambient temperature : 25±2℃
- 30min. warm-up time.

### 3.3 Measuring Equipment

- TOPCON BM-7
- Measuring spot size : field 2°

**Note (1)** Definition of Vsat and Vth (at 20℃)

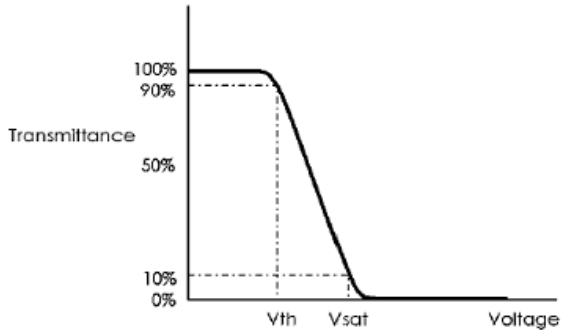


**Note (2)** Definition of Viewing Angle :

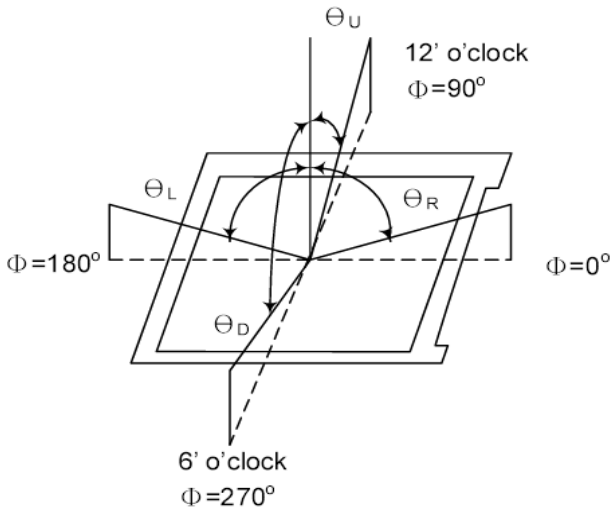


**Note (3)** Definition of Contrast Ratio(CR) :
measured at the center point of panel

$$CR = \frac{\text{Luminance with all pixels white}}{\text{Luminance with all pixels black}}$$

**Note (4)** Definition of Response Time : Sum of $T_R$ and $T_F$

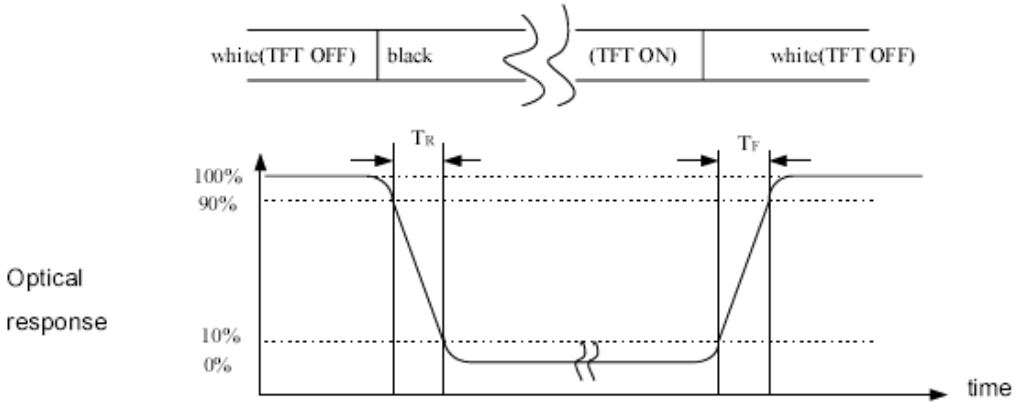

**Note (5)** Definition of optical measurement setup

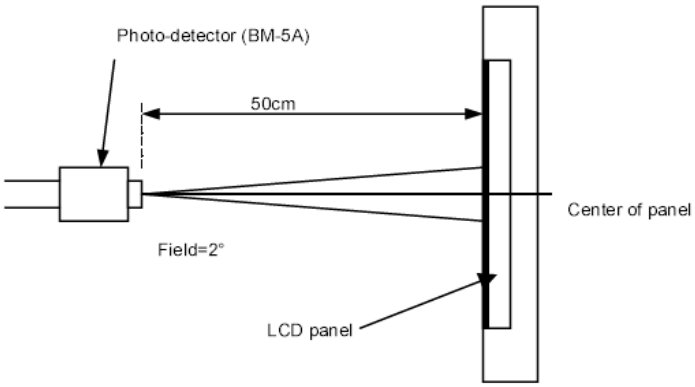


**Note (6)** Definition of brightness uniformity

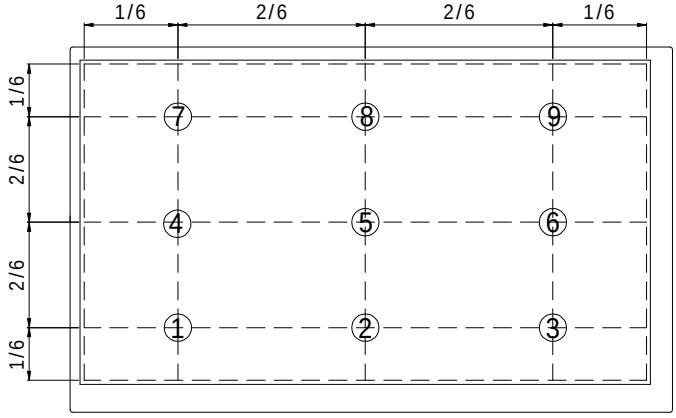


**Note (7)** Rubbing Direction (The different Rubbing Direction will cause the different optima view direction.

## 4.0 Block Diagram

### 4.1 TFT-LCD Module

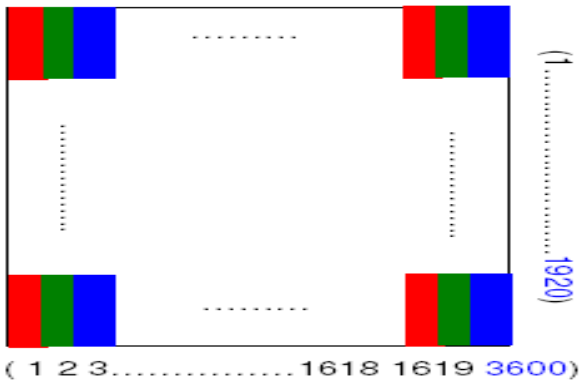

## 5.0 Interface Pin Connection

| NO. | PIN NAME | I/O | Description |
|---|---|---|---|
| 1 | NC | P | No connection |
| 2 | IOVCC | P | Power supply for system, IOVCC=1.8v |
| 3 | IOVCC | P | |
| 4 | GND | P | Ground |
| 5 | RST | I | Device reset signal |
| 6 | NC | - | No connection |
| 7 | GND | P | Ground |
| 8 | MIPI_0N | I | MIPI Negative data inputs |
| 9 | MIPI_0P | I | MIPI Positive data inputs |
| 10 | GND | P | Power ground |
| 11 | MIPI_1N | I | MIPI Negative data inputs |
| 12 | MIPI_1P | I | MIPI Positive data inputs |
| 13 | GND | P | Power ground |
| 14 | MIPI_CKN | I | MIPI Negative clock inputs |
| 15 | MIPI_CKP | I | MIPI Positive clock inputs |
| 16 | GND | P | Power ground |
| 17 | MIPI_2N | I | MIPI Negative data inputs |
| 18 | MIPI_2P | I | MIPI Positive data inputs |
| 19 | GND | P | Power ground |
| 20 | MIPI_3N | I | MIPI Negative data inputs |
| 21 | MIPI_3P | I | MIPI Positive data inputs |
| 22 | GND | P | Power ground |
| 23 | TP_SCL | I | Touch panel serial clock |
| 24 | TP_SDA | IO | Touch panel serial data |
| 25 | GND | P | Power ground |
| 26 | TE | O | Tearing effect output |
| 27 | PWMO | O | PWM control signal for LED driver(CABC) |
| 28 | TP_INT | O | Touch panel interrupt |
| 29 | TP_RST | I | Touch panel reset |
| 30 | GND | P | Power ground |
| 31 | LED- | P | LED Cathode |
| 32 | LED- | P | LED Cathode |
| 33 | NC | - | No connection |
| 34 | VSN | P | Analog supply negative voltage(-5~-6V) |
| 35 | VSN | P | Analog supply negative voltage(-5~-6V) |

| | | | |
|---|---|---|---|
| **36** | NC | - | No connection |
| **37** | VSP | P | Analog supply positive voltage(5~6V) |
| **38** | VSP | P | |
| **39** | LED+ | P | LED Anode |
| **40** | LED+ | P | LED Anode |

# 6. ELECTRICAL SPECIFICATION

## 6.1 Absolute Maximum Ratings

The absolute maximum ratings are list on table as follows. When used out of the absolute maximum ratings, the LSI may be permanently damaged. Using the LSI within the following electrical characteristics limit is strongly recommended for normal operation. If these electrical characteristic conditions are exceeded during normal operation, the LSI will malfunction and cause poor reliability.

| Parameter | Symbol | Rating | Unit | Note |
|---|---|---|---|---|
| Power Supply Voltage1 | VDDI-VSS | -0.3~+4.5 | V | |
| Power Supply Voltage2 | AVDD-VSS | -0.3~+6.6V | V | |
| Power Supply Voltage3 | VSS-AVEE | -0.3~+6.6V | V | |

**Note:**

If the absolute maximum rating of even is one of the above parameters is exceeded even momentarily, the quality of the product may be degraded. Absolute maximum ratings, therefore, specify the values exceeding which the product may be physically damaged. Be sure to use the product within the range of the absolute maximum ratings

## 6.2 DC characteristics

| Item | Symbol | Value | Unit |
|---|---|---|---|
| **Power supply voltage for logic** | IOVCC | -0.3~4.6 | V |
| **Power for analog negative** | VSN | 0 ~ -6.5 | V |
| **Power for analog positive** | VSP | 0 ~ +6.5 | V |

6.3 Power ON/OFF Sequence

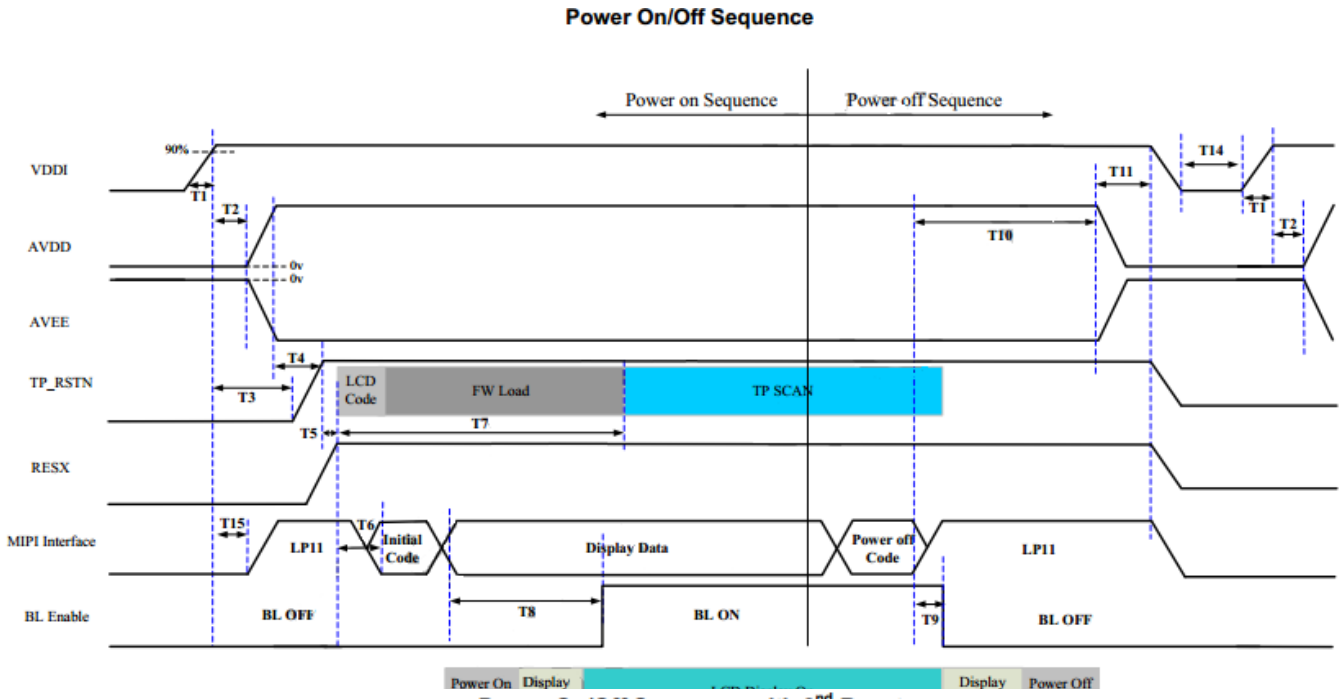


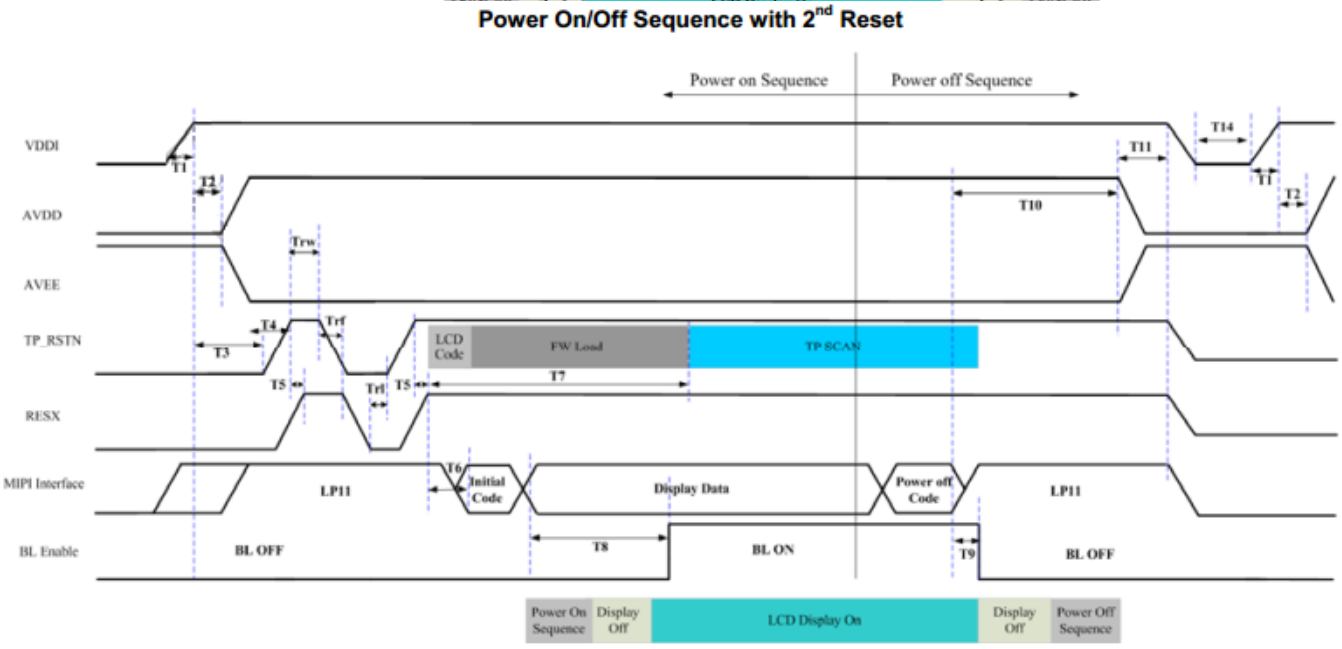

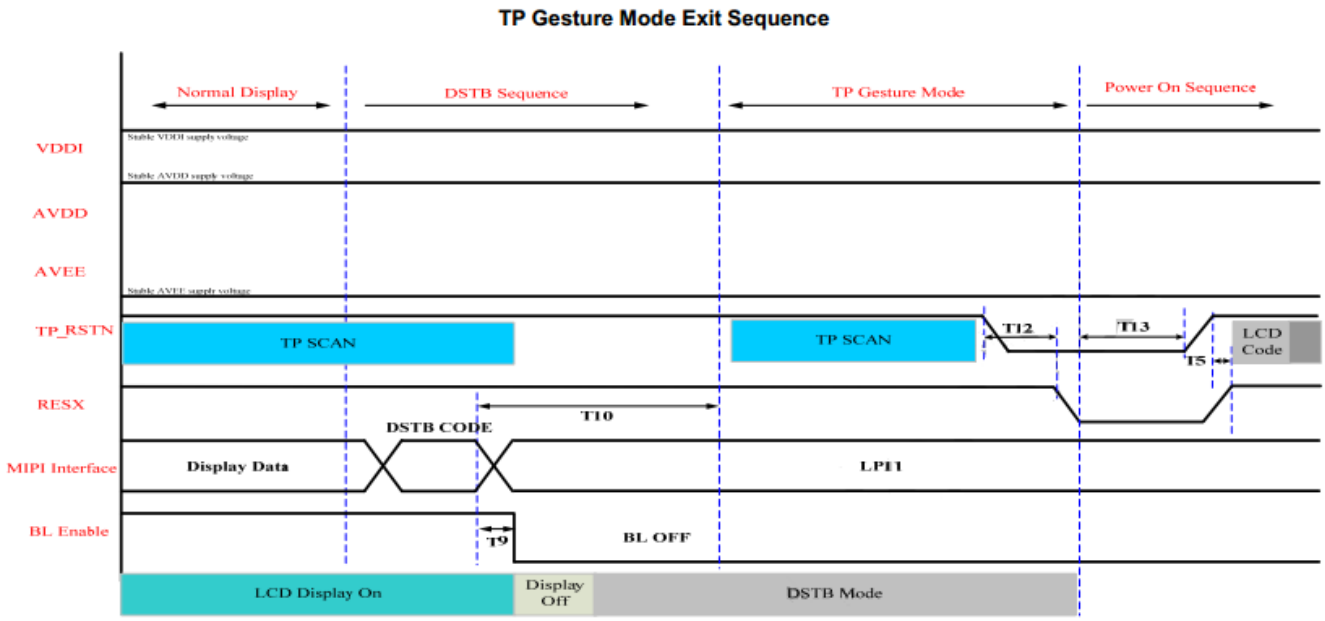


| Power on/off sequence timing | | | | |
|---|---|---|---|---|
| Parameter | Description | min | max | unit |
| T1 | Rise time 0.1VDDI to 0.9VDDI | 0 | 5 | ms |
| T2 | AVDD/AVEE rise after VDDI power on | 1 | | ms |
| T3 | TP reset time after VDDI power on | 5 | | ms |
| T4 | TP reset release time after AVDD power on | 100 | | us |
| T5 | TP reset release to LCD reset release | 0 | | ms |
| T6 | FLASH download LCD code after LCD reset | 120 | | ms |
| T7 | LCD reset release to TP scan start | 150 | | ms |
| T8 | LED on after initial code | 150 | | ms |
| T9 | LED off after power off code | 50 | | ms |
| T10 | AVDD/AVEE power down after power off code | 150 | | ms |
| T11 | VDDI power down after AVDD/AVEE power down | 5 | | ms |
| T12 | TP reset time before LCD reset | 5 | | ms |
| T13 | RESX reset falling to TP reset release | 5 | 120 | ms |
| T14 | VDDI rise again after previous VDDI powered down | 50 | | ms |
| T15 | MIPI signals start(Hi-Z/GND to LP11) after VDDI power on | 3 | | ms |

6.5 MIPI Interface DC Characteristics

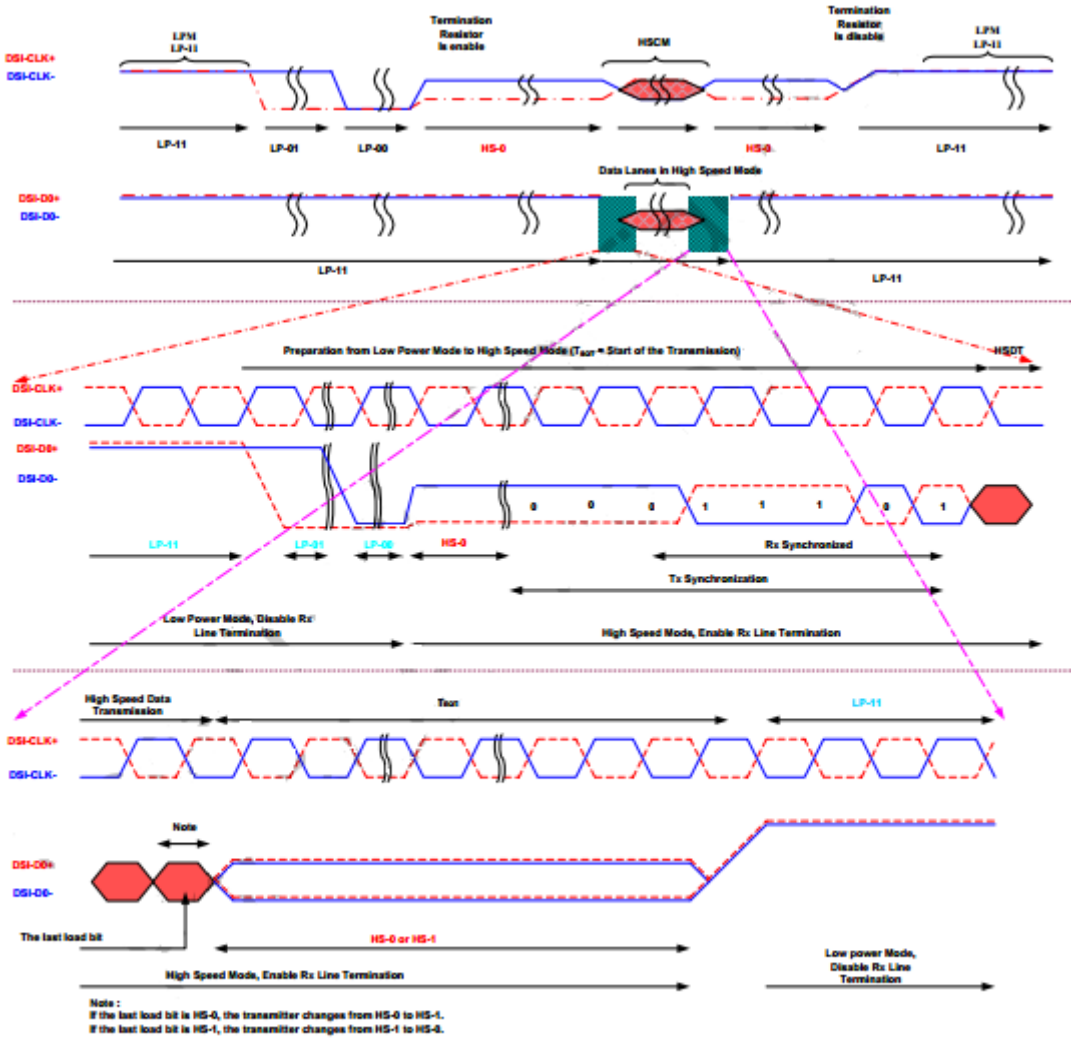


Figure: High speed clock burst

(AVDD = 5.0V~6.5V,AVEE = -5.0V~-6.5V,VDDI = 1.65V~3.6V, Ta = -30°C ~ 70°C)

| Parameter | Symbol | Conditions | Specification | | | Unit |
|---|---|---|---|---|---|---|
| | | | MIN | TYP | MAX | |
| **Power supply voltage for MIPI Interface** | | | | | | |
| Power supply voltage for MIPI interface | VDDAM | - | 1.65 | 1.8 | 3.6 | V |
| | LVDSVDD | - | 1.125 | 1.3 | 1.5 | V |
| **LPDT Input Characteristics** | | | | | | |
| Pad signal voltage range | VI | - | -50 | - | 1350 | mV |
| Ground Shift | VGNDSH | - | -50 | - | 50 | mV |
| Logic 0 input threshold | VIL | - | 0 | - | 550 | mV |
| Logic 1 input threshold | VIH | - | 880 | - | LVDSVDD | mV |
| Input hysteresis | VHYST | - | 25 | - | - | mV |
| **LPDT Output Characteristics** | | | | | | |
| Output low level | VOL | - | -50 | - | 50 | mV |
| Output high level | VOH | - | 1.1 | 1.2 | 1.3 | V |
| Logic 1 contention threshold | VIHCD,MIN | - | 450 | - | LVDSVDD | mV |
| Logic 0 contention threshold | VILCD,MAX | - | 0 | - | 200 | mV |
| Output impedence of LPDT | ZOLP | - | 80 | 100 | 125 | ohm |
| **Hi-speed Input/Output Characteristics** | | | | | | |
| Single-end input low voltage | VILHS | - | -40 | - | - | mV |
| Single-end input high voltage | VIHHS | - | - | - | 460 | mV |
| Single-end threshold for HS termination enable | VTERM-EN | - | - | - | 450 | mV |
| Differential input low threshold | VIDTL | - | -70 | - | - | mV |
| Differential input high threshold | VIDTH | - | - | - | 70 | mV |
| Common mode voltage | VCMRXDC | - | 70 | - | 330 | mV |
| Differential input impedence | ZID | - | 80 | 100 | 125 | ohm |

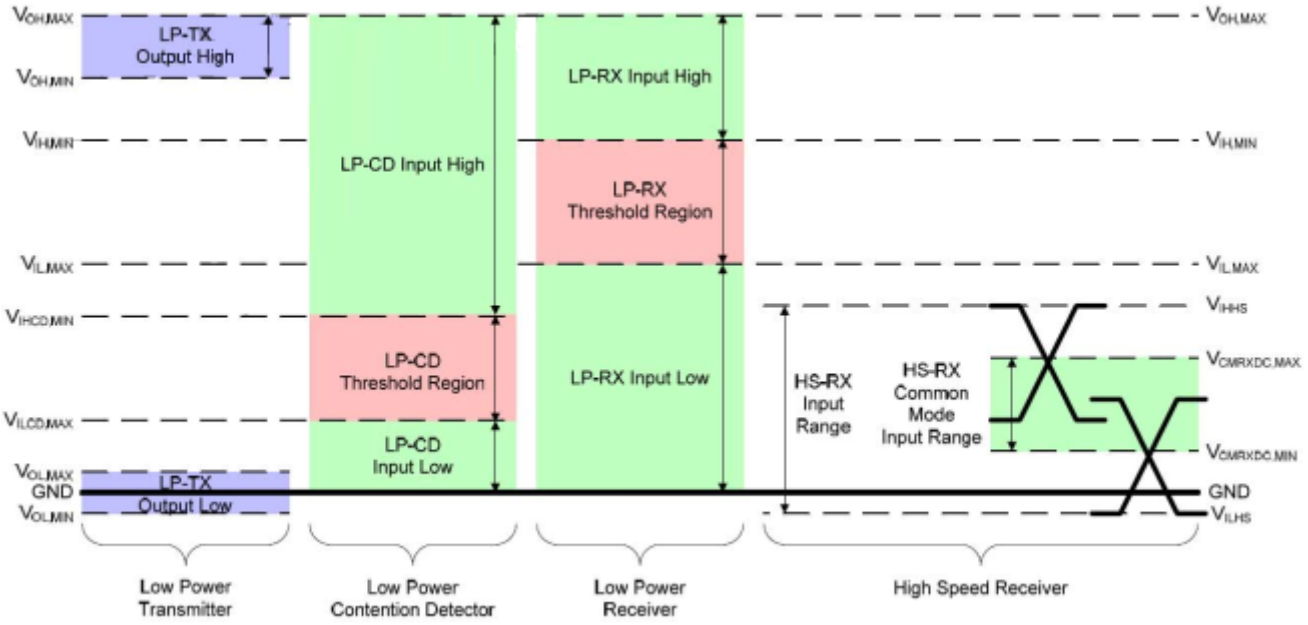

## 7.0 Reliability test items

| NO | Item | Conditions | Remark |
|---|---|---|---|
| 1 | High Temperature Storage | Ta=+70℃,96 hrs | |
| 2 | Low Temperature Storage | Ta=-30℃,96 hrs | |
| 3 | High Temperature Operation | Ta=+60℃,96 hrs | |
| 4 | Low Temperature Operation | Ta=-20℃,96 hrs | |
| 5 | High Temperature and High Humidity (operation) | Ta=+40℃,90%RH,96 hrs | |
| 6 | Thermal Cycling Test (non operation) | -30℃(0.5hr)→+70℃(0.5hr),100cycles | |
| 7 | Electrostatic Discharge | ±200V,200PF,0Ω1 time/each terminal | |

Note: All tests above are practiced at module type.
There is no display function NG issue occurred, All the cosmetic specification is judged before the reliability stress.
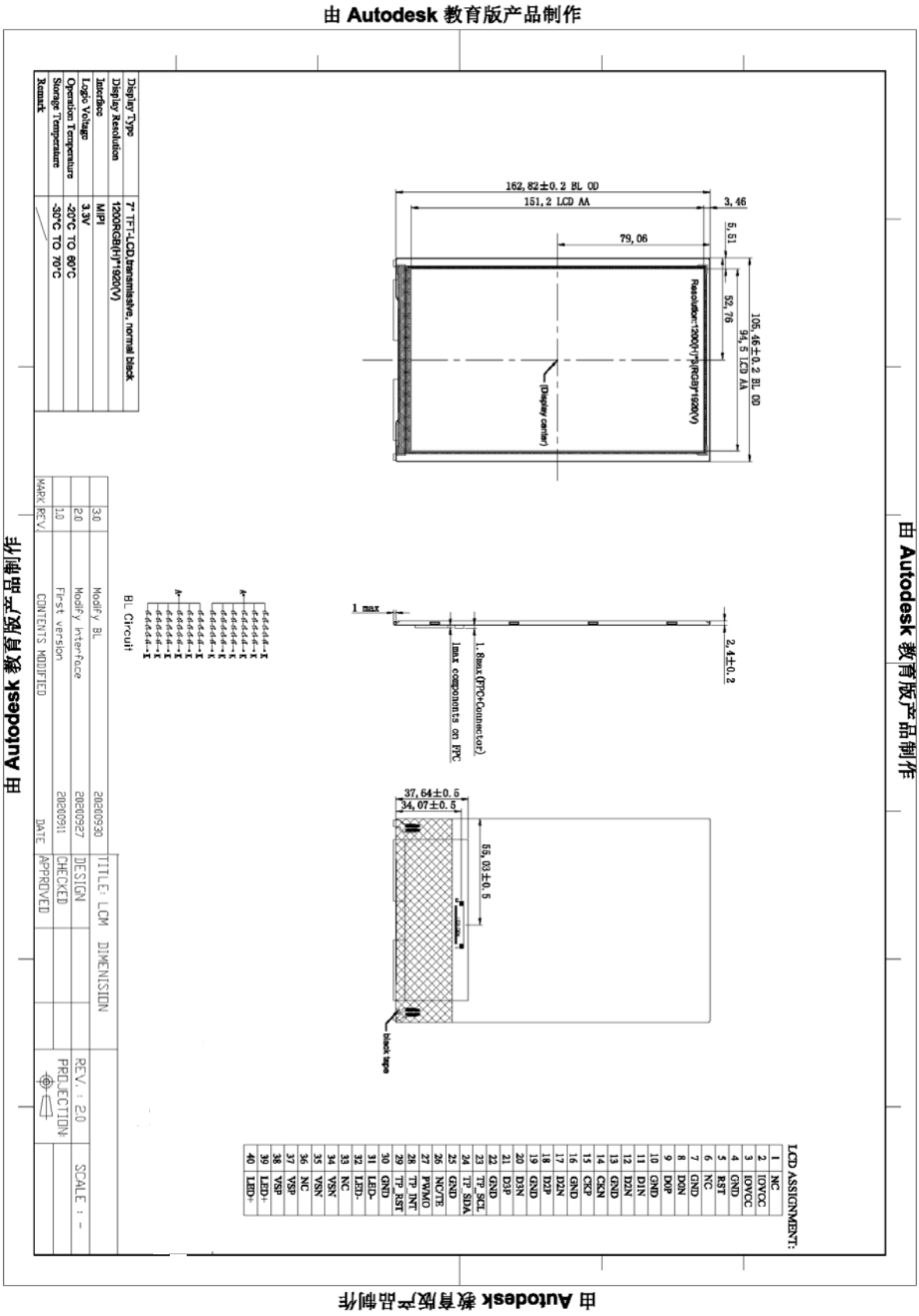
## 8.0 Outline dimension