POWERTIP TECH. CORP.

SPECIFICATIONS

CUSTOMER	:	
SAMPLE CODE	:	SH128800T003-ZFC01
MASS PRODUCTION CODE	:	PH128800T003-ZFC01
SAMPLE VERSION	:	01
SPECIFICATIONS EDITION	:	001
DRAWING NO. (Ver.)	:	LMD-PH128800T003-ZFC01 (Ver.001)
PACKAGING NO. (Ver.)	:	PKG-PH128800T003-ZFC01 (Ver.001)

Customer Approved

Date:

Approved	Checked	Designer
黃秋源 Oliver Huang	石建莊 Stone Shin	黃俊清 Ackey Huang

POWERTIP
2018.12.28
TW RD APR

■ Preliminary specification for design input

□ Specification for sample approval

POWERTIP TECH. CORP.

Headquarters: No.8, 6th Road, Taichung Industrial Park, Taichung, Taiwan
台中市 407 工業區六路 8 號

TEL: 886-4-2355-8168
FAX: 886-4-2355-8166

E-mail: sales@powertip.com.tw
Http://www.powertip.com.tw

History of Version

Date	Ver.	Edi.	Description	Page	Design by
12/26/2018	01	001	New Drawing.	-	Ackey

Total: 30 Page

Contents

1. SPECIFICATIONS
   - 1.1 Features
   - 1.2 Mechanical Specifications
   - 1.3 Absolute Maximum Ratings
   - 1.4 DC Electrical Characteristics
   - 1.5 Optical Characteristics
   - 1.6 Backlight Characteristics
   - 1.7 Touch Panel Characteristics
2. MODULE STRUCTURE
   - 2.1 Counter Drawing
   - 2.2 Interface Pin Description
   - 2.3 Timing Characteristics
3. QUALITY ASSURANCE SYSTEM
   - 3.1 Quality Assurance Flow Chart
   - 3.2 Inspection Specification
4. RELIABILITY TEST
   - 4.1 Reliability Test Condition
5. PRECAUTION RELATING PRODUCT HANDLING
   - 5.1 Safety
   - 5.2 Handling
   - 5.3 Storage
   - 5.4 Terms of Warranty

Appendix : LCM drawing.

1. SPECIFICATIONS

1.1 Features

Item	Standard Value
Screen size(inch)	12.1(Diagonal)
Resolution	1280* (R、G、B) * 800 Dots
Display mode	Full Viewing Angle, Normally Black
Touch panel	Projective Capacitive Touch Panel 10 Points touch
Surface treatment	AG type,3H hard coating
Color arrangement	RGB-stripe
Interface	LVDS
ROHS	THIS PRODUCT CONFORMS THE ROHS OF PTC Detail information please refer website : http://www.powertip.com.tw/news_detail.php?Key=1&cID=1

1.2 Mechanical Specifications

Item	Standard Value	Unit
Outline Dimension	305.0(W) * 200.0 (L) * 14.05 (H)	mm

LCD panel

Item	Standard Value	Unit
Active Area	261.12 (W) * 163.2 (L)	mm

Note : For detailed information please refer to LCM drawing.

1.3 Absolute Maximum Ratings

Item	Symbol	Min	Max	Unit	Note
Power Supply Voltage	VCC	-0.3	+4.0	V	-
Operating Temperature	T_{OP}	-20	+80	℃	(1)
Storage Temperature	T_{ST}	-20	+80	℃	(1)(2)

Note 1:

(a) 90%RH Max. (Ta<=40℃)

(b) Wet-bulb temperature should be 39℃ Max. (Ta>40℃).

(c) No condensation.

Note 2:

The temperature of panel surface should be -10℃ min. and 70℃ max.

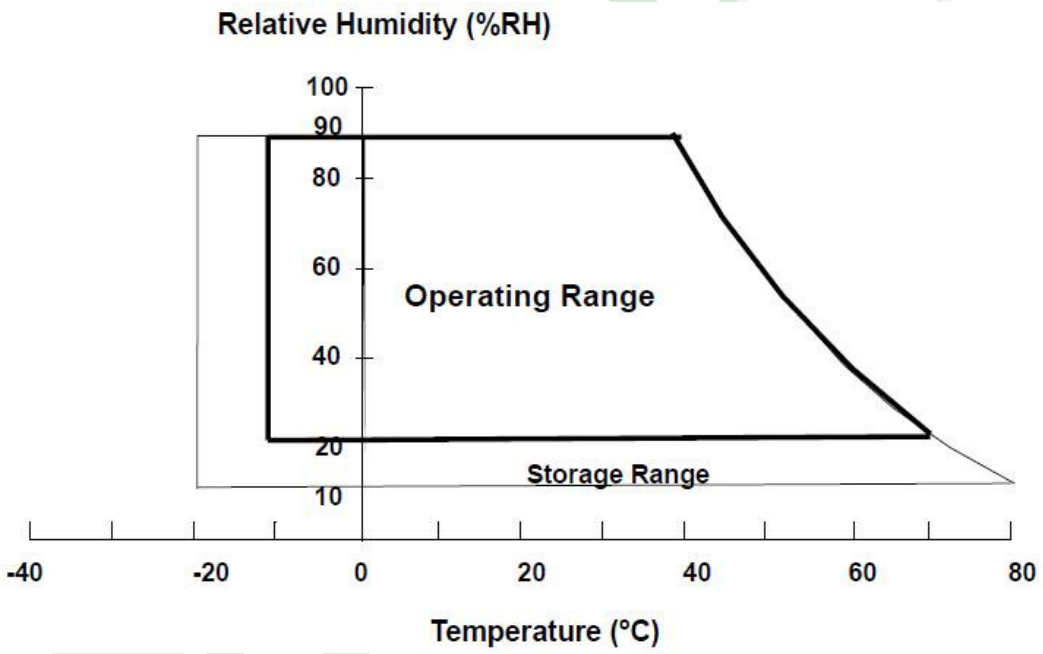

1.4 DC Electrical Characteristics

Item	Symbol	Condition	Min.	Typ.	Max.	Unit	Note
Power Supply Voltage	VCC	-	3.0	3.3	3.6	V	-
Power Supply Voltage For Led Driver	VLED	-	9.0	12.0	15.0	V	
Supply Current	IDD	VDD=3.3V Pattern= Picture	-	0.5	0.75	A	(1)

Note1: Maximum current display.

1.5 Optical Characteristics

TFT LCD Panel Ta=25℃

Item		Symbol	Condition	Min.	Typ.	Max.	Unit	-
Response time		Tr	-	-	15	20	ms	Note2
		Tf		-	10	15		
Viewing angle	Top	ΘY+	CR ≥ 10	80	88	-	Deg.	Note4
	Bottom	ΘY-		80	88	-		
	Left	ΘX-		80	88	-		
	Right	ΘX+		80	88	-		
Contrast ratio		CR	-	800	1000	-	-	Note3
Color of CIE Coordinate (With B/L & Touch Panel)	White	X		0.25	0.30	0.35	-	Note1
		Y		0.29	0.34	0.39		
	Red	X		0.54	0.59	0.64		
		Y		0.30	0.35	0.40		
	Green	X		0.28	0.33	0.38		
		Y		0.52	0.57	0.62		
	Blue	X		0.09	0.14	0.19		
		Y		0.05	0.10	0.15		
Average Brightness Pattern=white display		IV	-	400	500	-	cd/m2	Note1
Luminance uniformity		YU	-	75	-	-	%	Note1

Note1:

1：△B=B(min) / B(max) × 100%

2：Measurement Condition for Optical Characteristics:

a：Environment: 25℃±5℃ / 60±20%R.H，no wind，dark room below 10 Lux at typical lamp current and typical operating frequency.

b：Measurement Distance: 500 ± 50 ㎜ ，(θ= 0°)

c：Equipment: TOPCON BM-7 fast，(field 1°)，after 10 minutes operation.

d：The uncertainty of the C.I.E coordinate measurement ±0.01，Average Brightness ± 4%

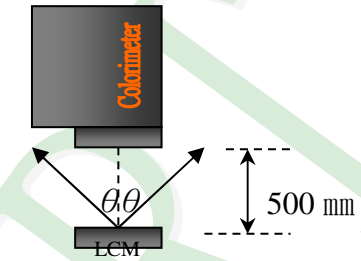

Colorimeter=BM-7 fast

Note2: Definition of response time:

The output signals of photo detector are measured when the input signals are changed from “black” to “white”(falling time) and from “white” to “black”(rising time), respectively. The response time is defined as the time interval between the 10% and 90% of Amplitudes.

Refer to figure as below:

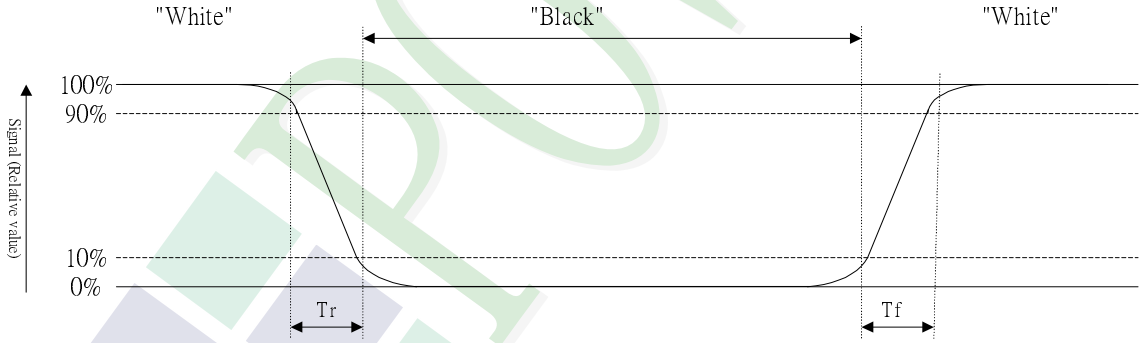

Note3: Definition of contrast ratio:

Contrast ratio is calculated with the following formula

$$\text{Contrast ratio (CR)} = \frac{\text{Photo detector output when LCD is at “White” state}}{\text{Photo detector output when LCD is at “Black” state}}$$

Note4: Definition of viewing angle:
Refer to figure as below:

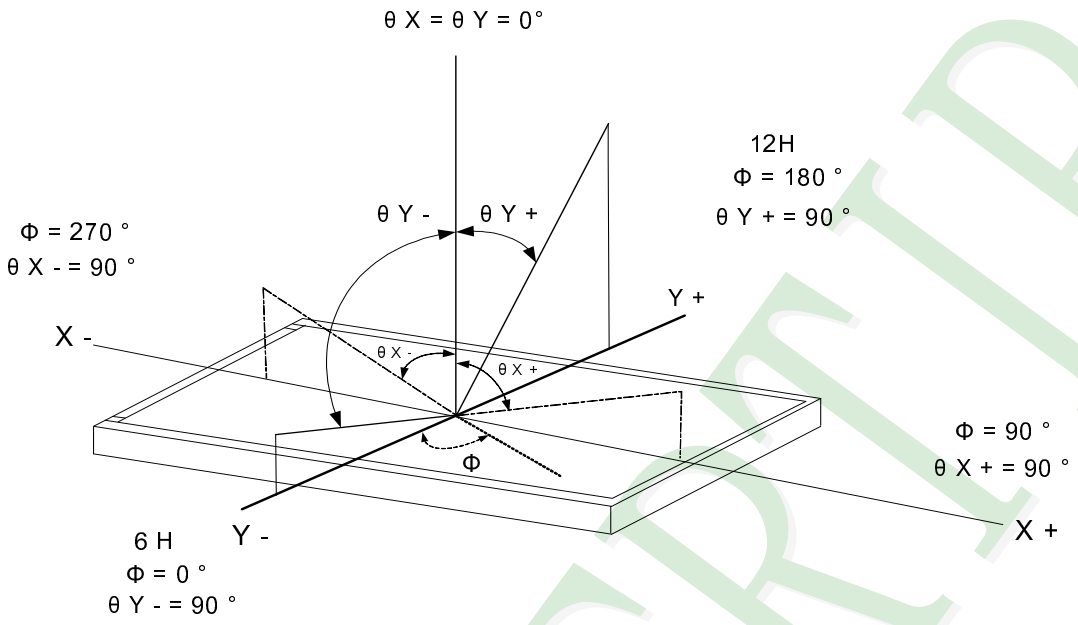

1.6 Backlight Characteristics

Electrical / Optical Characteristics

Item		Symbol	Min.	Typ.	Max.	Unit	Note
Backlight Power		VLED	9.0	12.0	15.0	V	Ta = 25℃
Backlight Power		ILED	-	1.0	1.5	A	
LED Driver output Voltage		VF	26.0	28.0	30.0	V	-
LED Driver output Current		IF	320	400		mA	-
EN Signal Voltage	High	PWM/EN	1.5	-	-	V	-
	Low		-	-	0.4		
PWM Frequency		PWM/EN	60	120	140	KHz	*1)
Lifetime		-	50000	-	-	Hr	*2)
Color		White					-

*1) PWM/EN = 5 V

*2) Definition of the LED life time: Luminance (L) under 50% of the initial value. LED life time is restricted under normal condition, ambient temperature=25℃

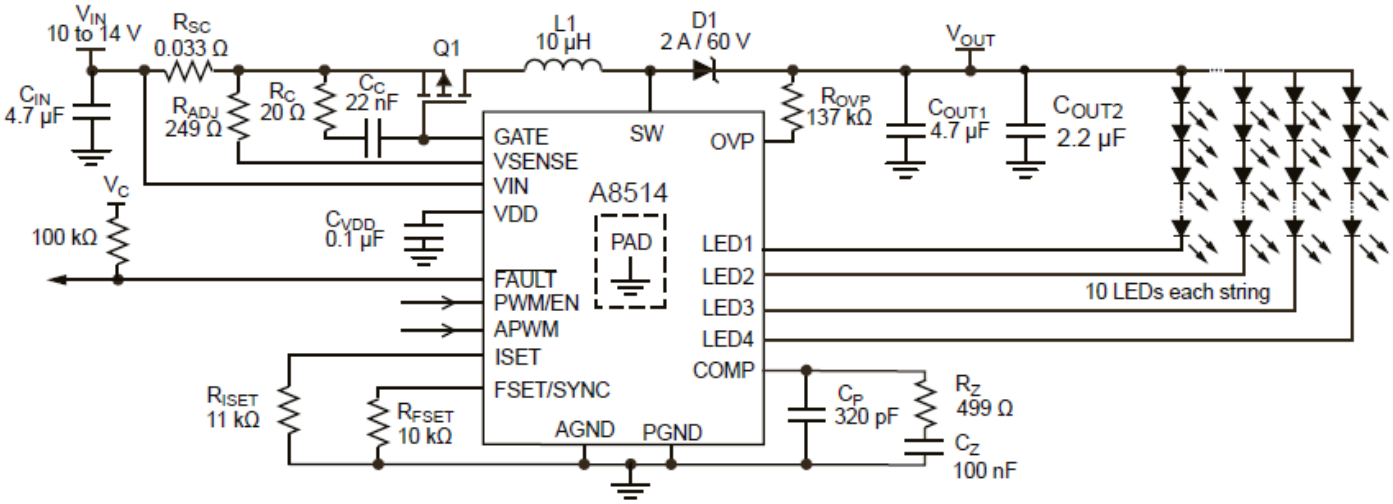

LED channels: 4

Series LEDs per channel: 10

1.7 Touch Panel Characteristics

Features

Item	Standard Value
Touch Panel Size	12.1
Touch type	Projective capacitive touch panel
Input Method	Finger / 10 Points touch
Output Interface	USB

Mechanical Specifications

Item	Standard Value	Unit
Viewing Area	262.6 (W) * 164.7 (L)	mm

Absolute Maximum Ratings

Item	Symbol	Condition	Min.	Max.	Unit
Supply voltage	VBUS	-	-0.3	+6.0	V
Operating Temperature	T_{OP}	-	-20	+70	℃
Storage Temperature	T_{ST}	-	-30	+80	℃

DC Electrical Characteristics

Item	Symbol	Condition	Min.	Typ.	Max.	Unit
Power Supply Voltage	VBUS	-	-	5.0	-	V

Touch Panel IC Read/Write description & Register Mapping

Reference: Atmel Touch Driver Porting Reference Guide.

2. MODULE STRUCTURE

2.1 Counter Drawing

2.1.1 LCM Mechanical Diagram

* See Appendix

POWERTIP

2.2 Interface Pin Description

CN1

Pin No.	Symbol	Description
1	NC	No Connection.
2	NC	No Connection.
3	NC	No Connection.
4	NC	No Connection.
5	NC	No Connection.
6	NC	No Connection.
7	GND	Ground.
8	GND	Ground.
9	VCC	Power supply: +3.3V.
10	VCC	Power supply: +3.3V.
11	GND	Ground.
12	GND	Ground.
13	RX0-	Negative transmission data of pixel 0.
14	RX0+	Positive transmission data of pixel 0.
15	GND	Ground.
16	RX1-	Negative transmission data of pixel 1.
17	RX1+	Positive transmission data of pixel 1.
18	GND	Ground.
19	RX2-	Negative transmission data of pixel 2.
20	RX2+	Positive transmission data of pixel 2.
21	GND	Ground.
22	RXCLK-	Negative of clock.
23	RXCLK+	Positive of clock.
24	GND	Ground.
25	RX3-	Negative transmission data of pixel 3.
26	RX3+	Positive transmission data of pixel 3.

27	GND	Ground.
Pin No.	Symbol	Description
28	SEL 6/8	LVDS 6/8 bit select function control. Low or NC → 6bit Input Mode. High → 8bit Input Mode.
29	GND	Ground.
30	GND	Ground.

CN2: Backlight

Pin No.	Symbol	Description
1	VLED	Power Supply.(+12.0V)
2	VLED	Power Supply. (+12.0V)
3	EN/PWM	LED Enable Pin. (Active Hi). PWM dimming pin, used to control the LED intensity by using pulse width modulation. Also used to enable the A8514.
4	NC	No Connection.
5	GND	Ground.
6	GND	Ground.

CTP Board Interface Pin Description

USB1

Pin No.	Symbol
1	VBUS
2	DM
3	DP
4	NC
5	GND

2.3 Timing Characteristics

2.3.1 Color Data Input Assignment

The brightness of each primary color (red, green and blue) is based on the 6-bit gray scale data input for the color. The higher the binary input, the brighter the color. The table below provides the assignment of color.

Color		Data Signal																	
		Red						Green						Blue					
		R5	R4	R3	R2	R1	R0	G5	G4	G3	G2	G1	G0	B5	B4	B3	B2	B1	B0
Basic Colors	Black	0	0	0	0	0	0	0	0	0	0	0	0	0	0	0	0	0	0
	Red	1	1	1	1	1	1	0	0	0	0	0	0	0	0	0	0	0	0
	Green	0	0	0	0	0	0	1	1	1	1	1	1	0	0	0	0	0	0
	Blue	0	0	0	0	0	0	0	0	0	0	0	0	1	1	1	1	1	1
	Cyan	0	0	0	0	0	0	1	1	1	1	1	1	1	1	1	1	1	1
	Magenta	1	1	1	1	1	1	0	0	0	0	0	0	1	1	1	1	1	1
	Yellow	1	1	1	1	1	1	1	1	1	1	1	1	0	0	0	0	0	0
	White	1	1	1	1	1	1	1	1	1	1	1	1	1	1	1	1	1	1
Gray Scale Of Red	Red(0)/Dark	0	0	0	0	0	0	0	0	0	0	0	0	0	0	0	0	0	0
	Red(1)	0	0	0	0	0	1	0	0	0	0	0	0	0	0	0	0	0	0
	Red(2)	0	0	0	0	1	0	0	0	0	0	0	0	0	0	0	0	0	0
	:	:	:	:	:	:	:	:	:	:	:	:	:	:	:	:	:	:	:
	:	:	:	:	:	:	:	:	:	:	:	:	:	:	:	:	:	:	:
	Red(61)	1	1	1	1	0	1	0	0	0	0	0	0	0	0	0	0	0	0
	Red(62)	1	1	1	1	1	0	0	0	0	0	0	0	0	0	0	0	0	0
	Red(63)	1	1	1	1	1	1	0	0	0	0	0	0	0	0	0	0	0	0
Gray Scale Of Green	Green(0)/Dark	0	0	0	0	0	0	0	0	0	0	0	0	0	0	0	0	0	0
	Green(1)	0	0	0	0	0	0	0	0	0	0	0	1	0	0	0	0	0	0
	Green(2)	0	0	0	0	0	0	0	0	0	0	1	0	0	0	0	0	0	0
	:	:	:	:	:	:	:	:	:	:	:	:	:	:	:	:	:	:	:
	:	:	:	:	:	:	:	:	:	:	:	:	:	:	:	:	:	:	:
	Green(61)	0	0	0	0	0	0	1	1	1	1	0	1	0	0	0	0	0	0
	Green(62)	0	0	0	0	0	0	1	1	1	1	1	0	0	0	0	0	0	0
	Green(63)	0	0	0	0	0	0	1	1	1	1	1	1	0	0	0	0	0	0
Gray Scale Of Blue	Blue(0)/Dark	0	0	0	0	0	0	0	0	0	0	0	0	0	0	0	0	0	0
	Blue(1)	0	0	0	0	0	0	0	0	0	0	0	0	0	0	0	0	0	1
	Blue(2)	0	0	0	0	0	0	0	0	0	0	0	0	0	0	0	0	1	0
	:	:	:	:	:	:	:	:	:	:	:	:	:	:	:	:	:	:	:
	:	:	:	:	:	:	:	:	:	:	:	:	:	:	:	:	:	:	:
	Blue(61)	0	0	0	0	0	0	0	0	0	0	0	0	1	1	1	1	0	1
	Blue(62)	0	0	0	0	0	0	0	0	0	0	0	0	1	1	1	1	1	0
	Blue(63)	0	0	0	0	0	0	0	0	0	0	0	0	1	1	1	1	1	1

The brightness of each primary color (red, green and blue) is based on the 8-bit gray scale data input for the color. The higher the binary input, the brighter the color. The table below provides the assignment of color.

Color		Data Signal																							
		Red								Green								Blue							
		R7	R6	R5	R4	R3	R2	R1	R0	G7	G6	G5	G4	G3	G2	G1	G0	B7	B6	B5	B4	B3	B2	B1	B0
Basic Colors	Black	0	0	0	0	0	0	0	0	0	0	0	0	0	0	0	0	0	0	0	0	0	0	0	0
	Red	1	1	1	1	1	1	1	1	0	0	0	0	0	0	0	0	0	0	0	0	0	0	0	0
	Green	0	0	0	0	0	0	0	0	1	1	1	1	1	1	1	1	0	0	0	0	0	0	0	0
	Blue	0	0	0	0	0	0	0	0	0	0	0	0	0	0	0	0	1	1	1	1	1	1	1	1
	Cyan	0	0	0	0	0	0	0	0	1	1	1	1	1	1	1	1	1	1	1	1	1	1	1	1
	Magenta	1	1	1	1	1	1	1	1	0	0	0	0	0	0	0	0	1	1	1	1	1	1	1	1
	Yellow	1	1	1	1	1	1	1	1	1	1	1	1	1	1	1	1	0	0	0	0	0	0	0	0
	White	1	1	1	1	1	1	1	1	1	1	1	1	1	1	1	1	1	1	1	1	1	1	1	1
Gray Scale Of Red	Red(0) / Dark	0	0	0	0	0	0	0	0	0	0	0	0	0	0	0	0	0	0	0	0	0	0	0	0
	Red(1)	0	0	0	0	0	0	0	1	0	0	0	0	0	0	0	0	0	0	0	0	0	0	0	0
	Red(2)	0	0	0	0	0	0	1	0	0	0	0	0	0	0	0	0	0	0	0	0	0	0	0	0
	:	:	:	:	:	:	:	:	:	:	:	:	:	:	:	:	:	:	:	:	:	:	:	:	:
	:	:	:	:	:	:	:	:	:	:	:	:	:	:	:	:	:	:	:	:	:	:	:	:	:
	Red(253)	1	1	1	1	1	1	0	1	0	0	0	0	0	0	0	0	0	0	0	0	0	0	0	0
	Red(254)	1	1	1	1	1	1	1	0	0	0	0	0	0	0	0	0	0	0	0	0	0	0	0	0
	Red(255)	1	1	1	1	1	1	1	1	0	0	0	0	0	0	0	0	0	0	0	0	0	0	0	0
Gray Scale Of Green	Green(0)/ Dark	0	0	0	0	0	0	0	0	0	0	0	0	0	0	0	0	0	0	0	0	0	0	0	0
	Green(1)	0	0	0	0	0	0	0	0	0	0	0	0	0	0	0	1	0	0	0	0	0	0	0	0
	Green(2)	0	0	0	0	0	0	0	0	0	0	0	0	0	0	1	0	0	0	0	0	0	0	0	0
	:	:	:	:	:	:	:	:	:	:	:	:	:	:	:	:	:	:	:	:	:	:	:	:	:
	:	:	:	:	:	:	:	:	:	:	:	:	:	:	:	:	:	:	:	:	:	:	:	:	:
	Green(253)	0	0	0	0	0	0	0	0	1	1	1	1	1	1	0	1	0	0	0	0	0	0	0	0
	Green(254)	0	0	0	0	0	0	0	0	1	1	1	1	1	1	1	0	0	0	0	0	0	0	0	0
	Green(255)	0	0	0	0	0	0	0	0	1	1	1	1	1	1	1	1	0	0	0	0	0	0	0	0
Gray Scale Of Blue	Blue(0) / Dark	0	0	0	0	0	0	0	0	0	0	0	0	0	0	0	0	0	0	0	0	0	0	0	0
	Blue(1)	0	0	0	0	0	0	0	0	0	0	0	0	0	0	0	0	0	0	0	0	0	0	0	1
	Blue(2)	0	0	0	0	0	0	0	0	0	0	0	0	0	0	0	0	0	0	0	0	0	0	1	0
	:	:	:	:	:	:	:	:	:	:	:	:	:	:	:	:	:	:	:	:	:	:	:	:	:
	:	:	:	:	:	:	:	:	:	:	:	:	:	:	:	:	:	:	:	:	:	:	:	:	:
	Blue(253)	0	0	0	0	0	0	0	0	0	0	0	0	0	0	0	0	1	1	1	1	1	1	0	1
	Blue(254)	0	0	0	0	0	0	0	0	0	0	0	0	0	0	0	0	1	1	1	1	1	1	1	0
	Blue(255)	0	0	0	0	0	0	0	0	0	0	0	0	0	0	0	0	1	1	1	1	1	1	1	1

2.3.2 Display Timing Specifications

The input signal timing specifications are shown as the following table and timing diagram.

Signal	Item	Symbol	Min.	Typ.	Max.	Unit	Note
DCLK	Frequency	1/Tc	67.45	71	74.55	MHz	-
DE	Vertical Total Time	TV	810	823	1000	TH	-
	Vertical Addressing Time	TVD	800	800	800	TH	-
	Horizontal Total Time	TH	1360	1440	1600	Tc	-
	Horizontal Addressing Time	THD	1280	1280	1280	Tc	-

Note: Because this module is operated by DE only mode, Hsync and Vsync input signals are ignored.

INPUT SIGNAL TIMING DIAGRAM

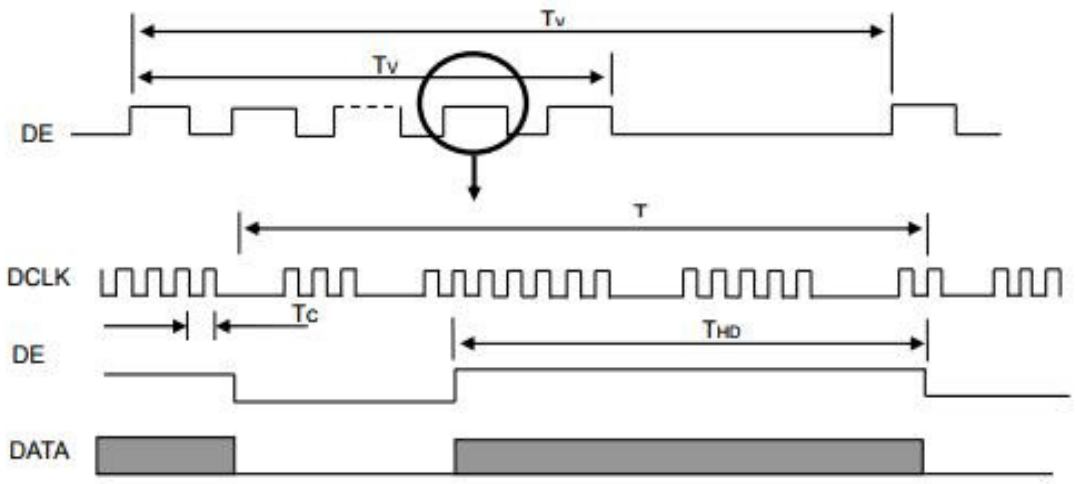

2.3.2 POWER ON/OFF SEQUENCE

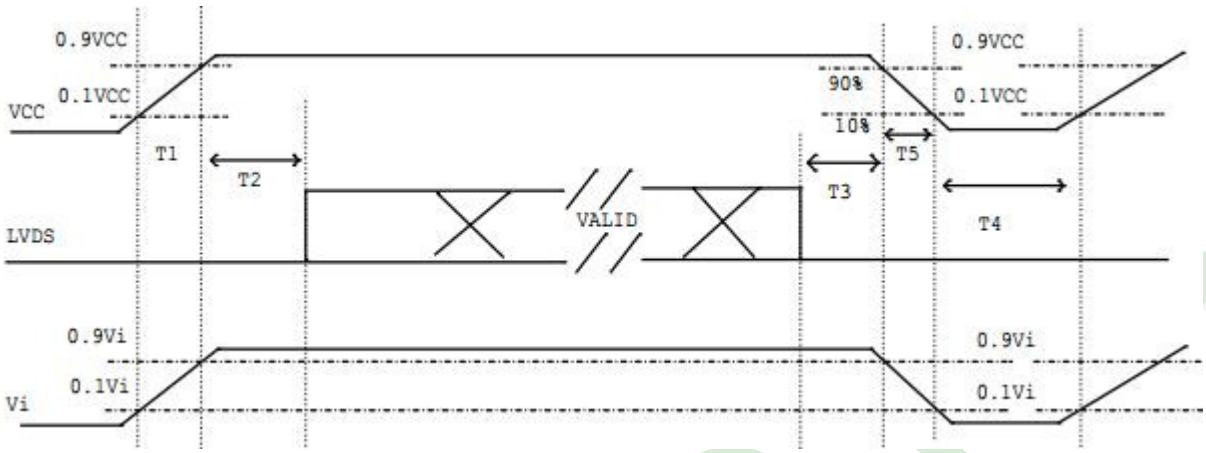

Parameter	Value			Units
	Min	Typ	Max	
T1	0.5	-	10	ms
T2	0	-	50	ms
T3	0	-	50	ms
T4	500	-	-	ms
T5	5	-	300	ms

LVDS Data Input Format

SEL 6/8="Low" or "NC" for 6 Bits LVDS

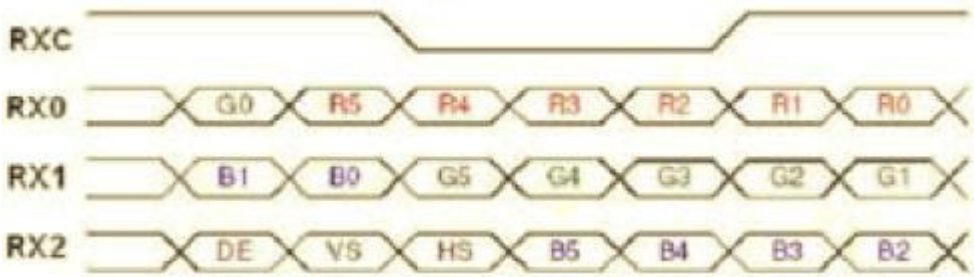

SEL 6/8="High" for 8 Bits LVDS

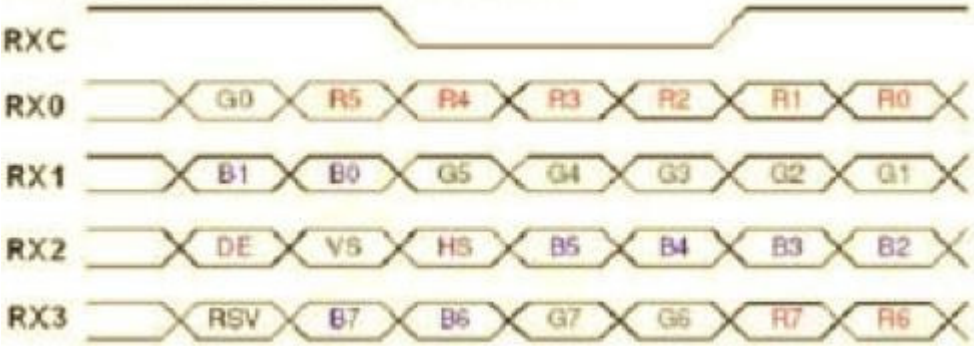

Signal Name	Description	Remark
R7 R6 R5 R4 R3 R2 R1 R0	Red Data 7 (MSB) Red Data 6 Red Data 5 Red Data 4 Red Data 3 Red Data 2 Red Data 1 Red Data 0 (LSB)	Red-pixel Data Each red pixel's brightness data consists of these 8 bits pixel data.
G7 G6 G5 G4 G3 G2 G1 G0	Green Data 7 (MSB) GreenData 6 GreenData 5 GreenData 4 GreenData 3 GreenData 2 GreenData 1 GreenData 0 (LSB)	Green-pixel Data Each green pixel's brightness data consists of these 8 bits pixel data.
B7 B6 B5 B4 B3 B2 B1 B0	Blue Data 7 (MSB) Blue Data 6 Blue Data 5 Blue Data 4 Blue Data 3 Blue Data 2 Blue Data 1 Blue Data 0 (LSB)	Blue-pixel Data Each blue pixel's brightness data consists of these 8 bits pixel data.
RXCLKIN+ RXCLKIN-	LVDS Clock Input	
DE	Display Enable	
VS	Vertical Sync	
HS	Horizontal Sync	

3. QUALITY ASSURANCE SYSTEM

3.1 Quality Assurance Flow Chart

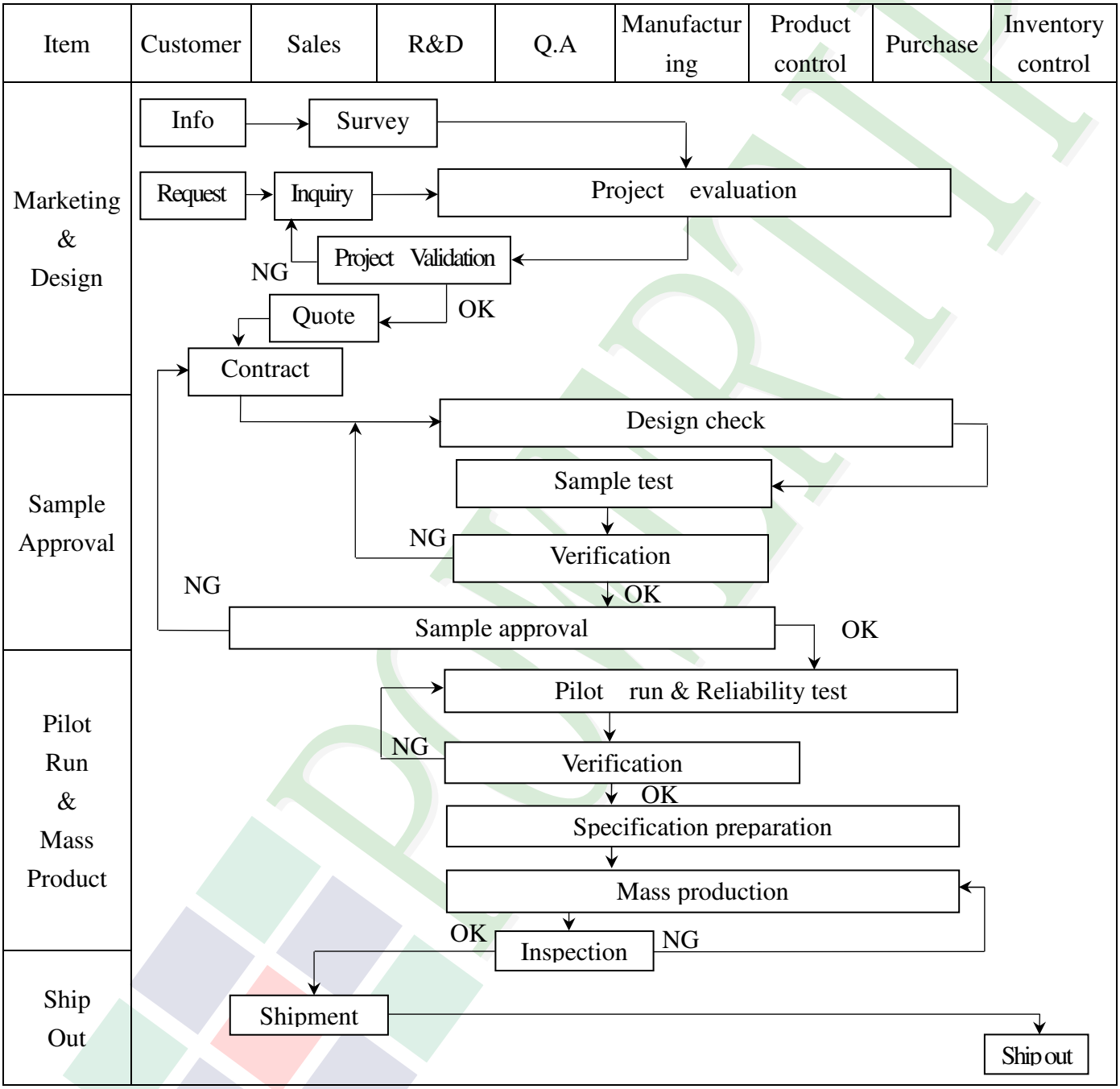

Item	Customer	Sales	R&D	Q.A	Manufacturing	Product control	Purchase	Inventory control
Sales Service	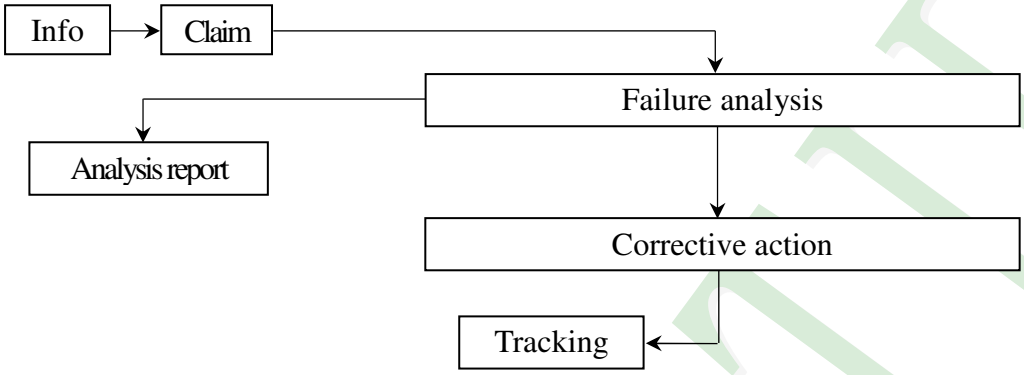							
Q.A Activity	1. ISO 9001 Maintenance Activities 2. Process improvement proposal 3. Equipment calibration 4. Education And Training Activities 5. Standardization Management							

3.2. Inspection Specification

◆Scope：The document shall be applied to TFT-LCD Module for 3.5″ ~15″ (Ver.B01).

◆Inspection Standard：MIL-STD-105E Table Normal Inspection Single Sampling Level Ⅱ.

◆Equipment：Gauge、MIL-STD、Powertip Tester、Sample

◆Defect Level：Major Defect AQL： 0.4 ; Minor Defect AQL： 1.5

◆OUT Going Defect Level：Sampling.

◆Standard of the product appearance test：

a. Manner of appearance test：

(1). The test best be under 20W×2 fluorescent light，and distance of view must be at 30 cm.

(2). The test direction is base on about around 45° of vertical line.

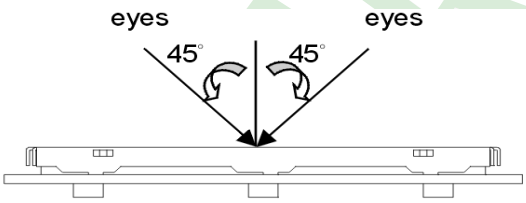

(3). Definition of area.

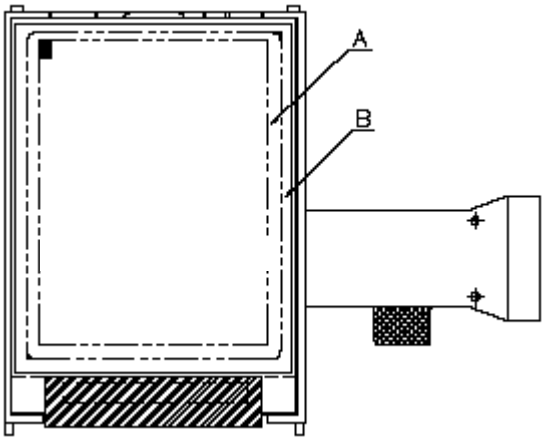

A area : viewing area

B area : Outside of viewing area

(4). Standard of inspection： (Unit：mm)

◆Specification For TFT-LCD Module 3.5″ ~15″ : (Ver.B01)

<table>
<tr><th>NO</th><th>Item</th><th>Criterion</th><th>Level</th></tr>
<tr><td rowspan="3">01</td><td rowspan="3">Product condition</td><td>1.1The part number is inconsistent with work order of production.</td><td>Major</td></tr>
<tr><td>1.2 Mixed product types.</td><td>Major</td></tr>
<tr><td>1.3 Assembled in inverse direction.</td><td>Major</td></tr>
<tr><td>02</td><td>Quantity</td><td>2.1The quantity is inconsistent with work order of production.</td><td>Major</td></tr>
<tr><td>03</td><td>Outline dimension</td><td>3.1 Product dimension and structure must conform to structure diagram.</td><td>Major</td></tr>
<tr><td rowspan="6">04</td><td rowspan="6">Electrical Testing</td><td>4.1 Missing line character and icon.</td><td>Major</td></tr>
<tr><td>4.2 No function or no display.</td><td>Major</td></tr>
<tr><td>4.3 Display malfunction.</td><td>Major</td></tr>
<tr><td>4.4 LCD viewing angle defect.</td><td>Major</td></tr>
<tr><td>4.5 Current consumption exceeds product specifications.</td><td>Major</td></tr>
<tr><td>4.6 Mura can not be seen through 5% ND filter, should be judged by the viewing angle of 90 degree.</td><td>Minor</td></tr>
<tr><td>05</td><td>Dot defect

(Bright dot、Dark dot)

On -display</td><td>
<table>
<tr><th colspan="2">Item</th><th>Acceptance (Q’ty)</th></tr>
<tr><td rowspan="4">Dot Defect</td><td>Bright Dot</td><td>≦ 4</td></tr>
<tr><td>Dark Dot</td><td>≦ 5</td></tr>
<tr><td>Joint Dot</td><td>≦ 3</td></tr>
<tr><td>Total</td><td>≦ 7</td></tr>
</table>
5.1 Inspection pattern：full white , full black , Red , Green and blue screens.
5.2 It is defined as dot defect if defect area ＞1/2 dot.
5.3 The distance between two dot defect ≧5 mm.
5.4 Bright dot that can not be seen through 5% ND filter.
</td><td>Minor</td></tr>
</table>

◆Specification For TFT-LCD Module 3.5″ ~15″：

(Ver.B01)

<table>
<tr><th>NO</th><th>Item</th><th>Criterion</th><th>Level</th></tr>
<tr><td>06</td><td>Black or white dot、scratch、contamination

Round type
 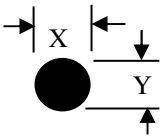

Φ＝(x＋y) / 2

Line type
 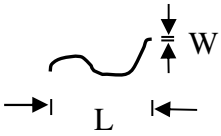
</td><td>6.1 Round type (Non-display or display)：
<table>
<tr><th rowspan="2">Dimension (diameter：Φ)</th><th colspan="2">Acceptance (Q’ty)</th></tr>
<tr><th>A area</th><th>B area</th></tr>
<tr><td>Φ ≦ 0.25</td><td>Ignore</td><td rowspan="4">Ignore</td></tr>
<tr><td>0.25 ＜ Φ ≦ 0.50</td><td>5</td></tr>
<tr><td>Φ ＞ 0.50</td><td>0</td></tr>
<tr><td>Total</td><td>5</td></tr>
</table>
6.2 Line type(Non-display or display)：
<table>
<tr><th rowspan="2">module size</th><th rowspan="2">Length (L)</th><th rowspan="2">Width (W)</th><th colspan="2">Acceptance (Q’ty)</th></tr>
<tr><th>A area</th><th>B area</th></tr>
<tr><td rowspan="5">3.5” to less 9”</td><td>---</td><td>W ≦ 0.03</td><td>Ignore</td><td rowspan="5">Ignore</td></tr>
<tr><td>L ≦10.0</td><td>0.03 ＜W ≦ 0.05</td><td>4</td></tr>
<tr><td>L ≦5.0</td><td>0.05 ＜W ≦ 0.10</td><td>2</td></tr>
<tr><td>---</td><td>W ＞0.10</td><td>As round type</td></tr>
<tr><td colspan="2">Total</td><td>5</td></tr>
<tr><td rowspan="4">9” to 15”</td><td>---</td><td>W ≦ 0.05</td><td>Ignore</td><td rowspan="4">Ignore</td></tr>
<tr><td>L ≦10.0</td><td>0.05 ＜W ≦ 0.10</td><td>5</td></tr>
<tr><td>---</td><td>W ＞0.10</td><td>As round type</td></tr>
<tr><td colspan="2">Total</td><td>5</td></tr>
</table></td><td>Minor</td></tr>
<tr><td>07</td><td>Polarizer Bubble</td><td>
<table>
<tr><th rowspan="2">Dimension (diameter：Φ)</th><th colspan="2">Acceptance (Q’ty)</th></tr>
<tr><th>A area</th><th>B area</th></tr>
<tr><td>Φ ≦ 0.25</td><td>Ignore</td><td rowspan="5">Ignore</td></tr>
<tr><td>0.25 ＜ Φ ≦ 0.50</td><td>4</td></tr>
<tr><td>0.50 ＜ Φ ≦ 0.80</td><td>1</td></tr>
<tr><td>Φ ＞ 0.80</td><td>0</td></tr>
<tr><td>Total</td><td>5</td></tr>
</table></td><td>Minor</td></tr>
</table>

◆Specification For TFT-LCD Module 3.5″ ~15″ : (Ver.B01)

NO	Item	Criterion	Level
08	The crack of glass	Symbols : X : The length of crack Y : The width of crack. Z : The thickness of crack W : terminal length t : The thickness of glass a : LCD side length 8.1 General glass chip : 8.1.1 Chip on panel surface and crack between panels: 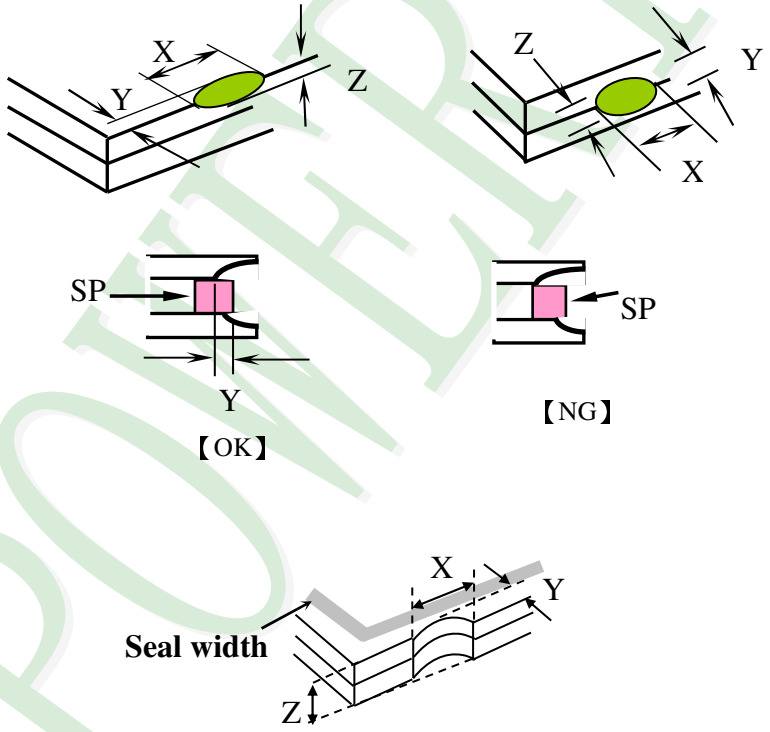 X : ≦ a; Y : Crack can't enter viewing area; Z : ≦1/2 t X : ≦ a; Y : Crack can't exceed the half of SP width.; Z : 1/2 t < Z ≦2 t	Minor

◆Specification For TFT-LCD Module 3.5″ ~15″ : (Ver.B01)

NO	Item	Criterion	Level
08	The crack of glass	Symbols : X : The length of crack Z : The thickness of crack t : The thickness of glass Y : The width of crack. W : terminal length a : LCD side length 8.1.2 Corner crack : 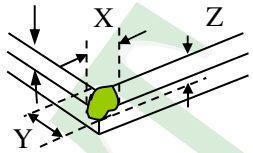 X | Y | Z ≦1/5 a | Crack can't enter viewing area | Z ≦ 1/2 t ≦1/5 a | Crack can't exceed the half of SP width. | 1/2 t < Z ≦ 2 t 8.2 Protrusion over terminal : 8.2.1 Chip on electrode pad : 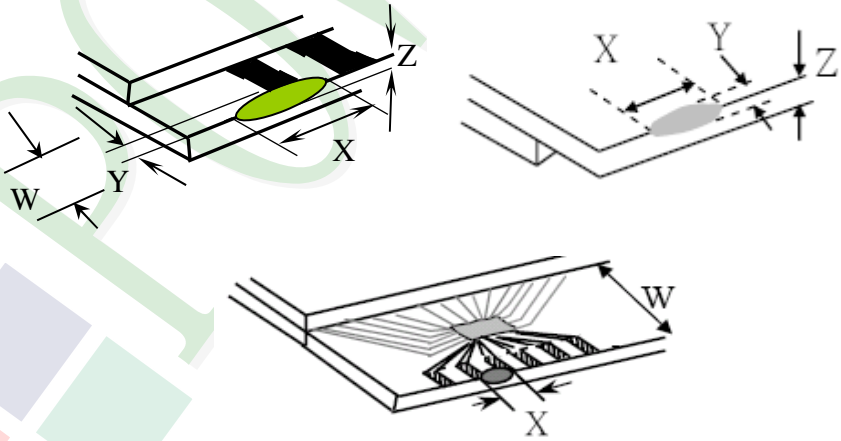 Front | X: ≦ a | Y: ≦ 1/2 W | Z: ≦ t Back | X: ≦ a | Y: ≦ W | Z: ≦ 1/2 t	Minor

◆Specification For TFT-LCD Module 3.5″ ~15″ : (Ver.B01)

NO	Item	Criterion	Level
08	The crack of glass	Symbols : X : The length of crack　　Y : The width of crack. Z : The thickness of crack　　W : terminal length t : The thickness of glass　　a : LCD side length 8.2.2 Non-conductive portion : 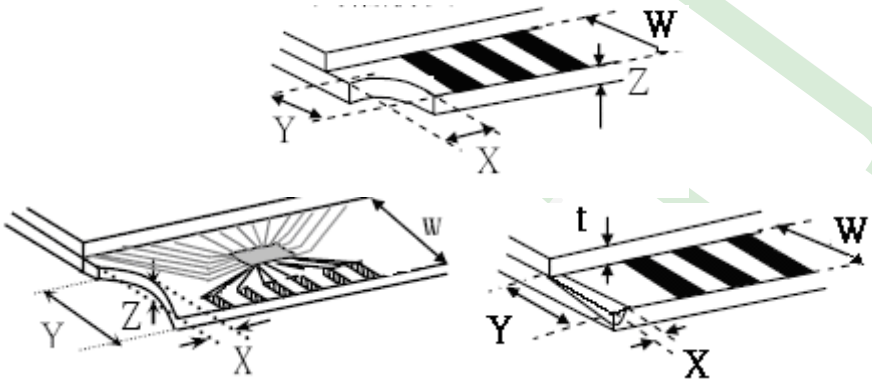 X ≦ 1/3 a　Y ≦ W　Z ≦t ⊙ If the chipped area touches the ITO terminal, over 2/3 of ● the ITO must remain and be inspected according to electrode terminal specifications. 8.2.3 Glass remain : 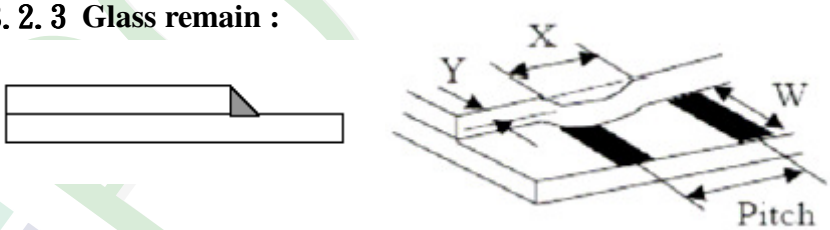 X ≦ a　Y ≦ 1/3 W　Z ≦t 8.2.4 Cracking Not Allowed	Minor

◆Specification For TFT-LCD Module 3.5″ ~15″ : (Ver.B01)

NO	Item	Criterion	Level
09	Backlight elements	9.1 Backlight can't work normally.	Major
		9.2 Backlight doesn't light or color is wrong.	Major
		9.3 Illumination source flickers when lit.	Major
10	General appearance	10.1 Pin type、quantity、dimension must match type in structure diagram.	Major
		10.2 No short circuits in components on PCB or FPC .	Major
		10.3 Parts on PCB or FPC must be the same as on the production characteristic chart .There should be no wrong parts , missing parts or excess parts.	Major
		10.4 Product packaging must the same as specified on packaging specification sheet.	Minor
		10.5 The folding and peeled off in polarizer are not acceptable.	Minor
		10.6 The PCB or FPC between B/L assembled distance(PCB or FPC) is ≦1.5 mm.	Minor

4. RELIABILITY TEST

4.1 Reliability Test Condition PH128800T003-ZFC01_001

<table>
<tr><th>NO.</th><th>TEST ITEM</th><th>TEST CONDITION</th></tr>
<tr><td>1</td><td>High Temperature Storage Test</td><td>Keep in +80 ±2℃ 240 hrs
Surrounding temperature, then storage at normal condition 4hrs.</td></tr>
<tr><td>2</td><td>Low Temperature Storage Test</td><td>Keep in -20 ±2℃ 240 hrs
Surrounding temperature, then storage at normal condition 4hrs.</td></tr>
<tr><td>3</td><td>High Temperature / High Humidity Storage Test</td><td>Keep in +60 ℃ / 90% R.H duration for 240 hrs
Surrounding temperature, then storage at normal condition 4hrs.
(Excluding the polarizer)</td></tr>
<tr><td>4</td><td>Temperature Cycling Storage Test</td><td>-20℃ → +25℃ → +80℃ → +25℃
(30mins) (5mins) (30mins) (5mins)
20 Cycle
Surrounding temperature, then storage at normal condition 4hrs.</td></tr>
<tr><td rowspan="2">5</td><td rowspan="2">ESD Test</td><td>Air Discharge:
Apply 2 KV with 5 times
Discharge for each polarity +/-</td><td>Contact Discharge:
Apply 250 V with 5 times
discharge for each polarity +/-</td></tr>
<tr><td colspan="2">1. Temperature ambiance : 15℃～35℃
2. Humidity relative : 30%～60%
3. Energy Storage Capacitance(Cs+Cd) : 150pF±10%
4. Discharge Resistance(Rd) : 330Ω±10%
5. Discharge, mode of operation :
Single Discharge (time between successive discharges at least 1 sec)
(Tolerance if the output voltage indication : ±5%)</td></tr>
<tr><td>6</td><td>Vibration Test (Packaged)</td><td>1. Sine wave 10～55 Hz frequency (1 min/sweep)
2. The amplitude of vibration :1.5 mm
3. Each direction (X、Y、Z) duration for 2 Hrs</td></tr>
<tr><td>7</td><td>Drop Test (Packaged)</td><td><table><tr><th>Packing Weight (Kg)</th><th>Drop Height (cm)</th></tr><tr><td>0 ~ 45.4</td><td>122</td></tr><tr><td>45.4 ~ 90.8</td><td>76</td></tr><tr><td>90.8 ~ 454</td><td>61</td></tr><tr><td>Over 454</td><td>46</td></tr></table>Drop Direction :※1 corner / 3 edges / 6 sides each 1time</td></tr>
</table>

5. PRECAUTION RELATING PRODUCT HANDLING

5.1 SAFETY

5.1.1 If the LCD panel breaks , be careful not to get the liquid crystal to touch your skin.

5.1.2 If the liquid crystal touches your skin or clothes , please wash it off immediately by using soap and water.

5.2 HANDLING

5.2.1 Avoid any strong mechanical shock which can break the glass.

5.2.2 Avoid static electricity which can damage the CMOS LSI—When working with the module , be sure to ground your body and any electrical equipment you may be using.

5.2.3 Do not remove the panel or frame from the module.

5.2.4 The polarizing plate of the display is very fragile. So , please handle it very carefully ,do not touch , push or rub the exposed polarizing with anything harder than an HB pencil lead (glass , tweezers , etc.)

5.2.5 Do not wipe the polarizing plate with a dry cloth , as it may easily scratch the surface of plate.

5.2.6 Do not touch the display area with bare hands , this will stain the display area.

5.2.7 Do not use ketonics solvent & aromatic solvent. Use with a soft cloth soaked with a cleaning naphtha solvent.

5.2.8 To control temperature and time of soldering is 320±10℃and 3-5 sec.

5.2.9 To avoid liquid (include organic solvent) stained on LCM .

5.3 STORAGE

5.3.1 Store the panel or module in a dark place where the temperature is 25℃ ±5℃ and the humidity is below 65% RH.

5.3.2 Do not place the module near organics solvents or corrosive gases.

5.3.3 Do not crush , shake , or jolt the module.

5.4 TERMS OF WARRANTY

5.4.1 Applicable warrant period

The period is within thirteen months since the date of shipping out under normal using and storage conditions.

5.4.2 Unaccepted responsibility

This product has been manufactured to your company's specification as a part for use in your company's general electronic products. It is guaranteed to perform according to delivery specifications. For any other use apart from general electronic equipment , we cannot take responsibility if the product is used in nuclear power control equipment , aerospace equipment , fire and security systems or any other applications in which there is a direct risk to human life and where extremely high levels of reliability are required.

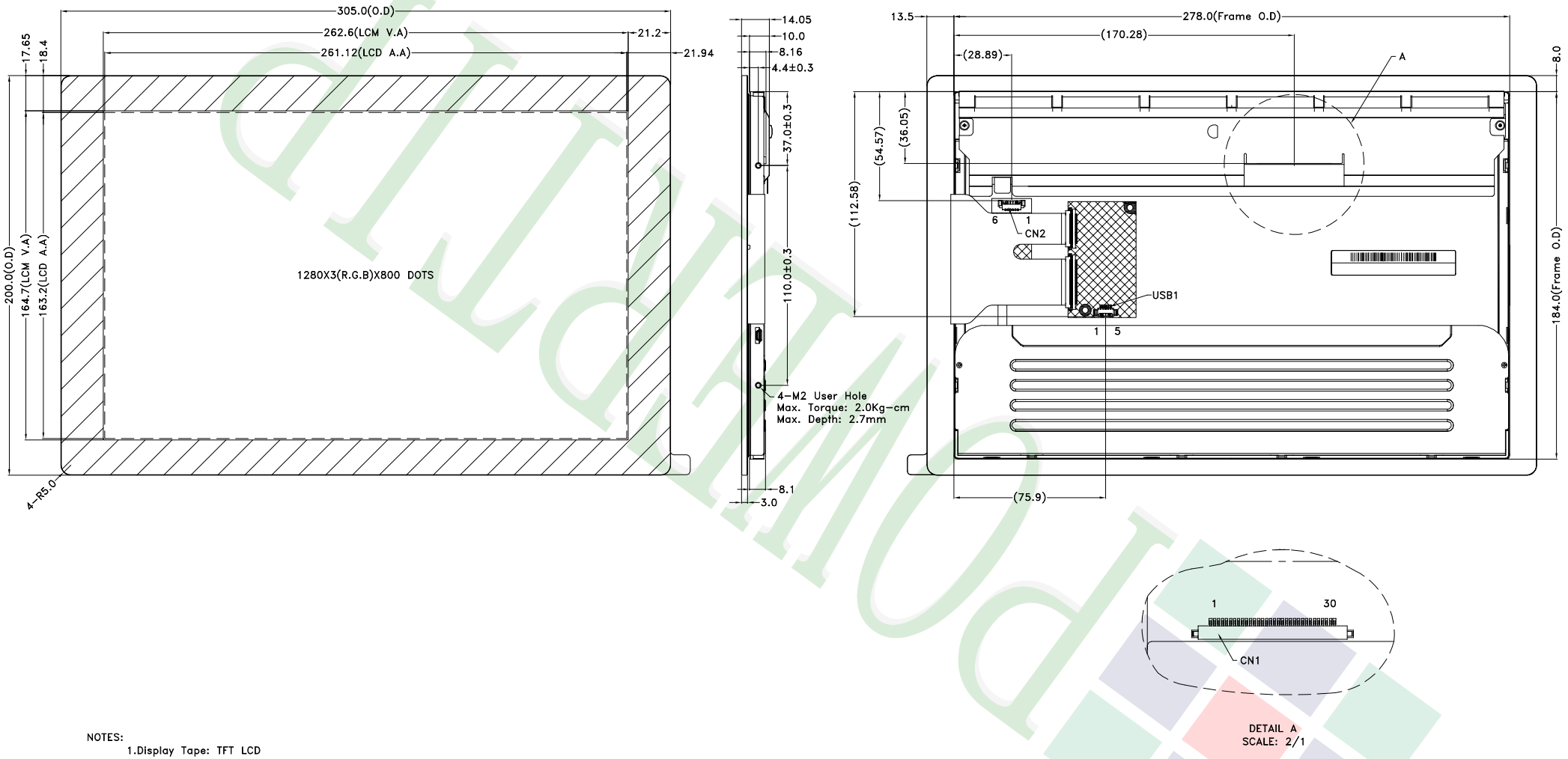

NOTES:

1. Display Tape: TFT LCD
2. The tolerance unless classified ±0.5mm
3. CN1: Starconn 093G30-B0001A-G4 OR EQUIVALENT
4. USB1: Molex 532610571 OR EQUIVALENT
5. CN2: Molex 548190572 OR EQUIVALENT

REV	REV BY	REVISER	DATE
007			
006			
005			
004			
003			
002			
001	NEW DRAWING	Stone	2018/12/26

PART NO: PH128800T003-ZFC01

DRAWING NAME : LMD-PH128800T003-ZFC01

TITLE: LCD MODULE DRAWING

久正光電股份有限公司
POWERTIP TECHNOLOGY CORPORATION

Design	Stone	(3)	Surface		
Check	Oliver	Unit	MM	Material	
Approve	Oliver	Scale	1:1	Thickness	
		Page	1/1	Quantity	

Length(mm) (Min) \ Tolerance / Precision	Precision Level
1 ~ 4	-
4 ~ 16	-
16 ~ 63	-
63 ~ 250	-
250 ~ 1000	-

PT-A-054-01

Ver.001	
Documents NO.	PKG-PH128800T003-ZFC01

LCM包裝規格書
LCM Packaging Specifications

Approve	Check	Contact
Oliver	Oliver	Stone

1.包裝材料規格表 (Packaging Material) : (per carton)

No.	Item	Model	Dimensions (mm)	1Pcs Weight	Quantity	Total Weight
1	成品 (LCM)	PH128800T003-ZFC01	305.0 X 200.0	0.93	18	16.74
2	靜電袋(1)Antistatic Bag	--	--	--	18	--
3	上蓋(2)EPE(Cover)	FOAM000000197	510 X 355 X 55	0.16	1	0.16
4	下座(3)EPE(Bottom)	FOAM000000198	510 X 355 X 100	0.34	1	0.34
5	外紙箱(4)Carton	BX53537327CCBA	535 X 373 X 265	1.1624	1	1.1624
6						

2.一 整箱總重量 (Total LCD Weight in carton) : 18.4 Kg±10%

3.單箱數量規格表 (Packaging Specifications and Quantity) :

Total LCM quantity in carton : quantity per EPE 18 x no of EPE 1 = 18

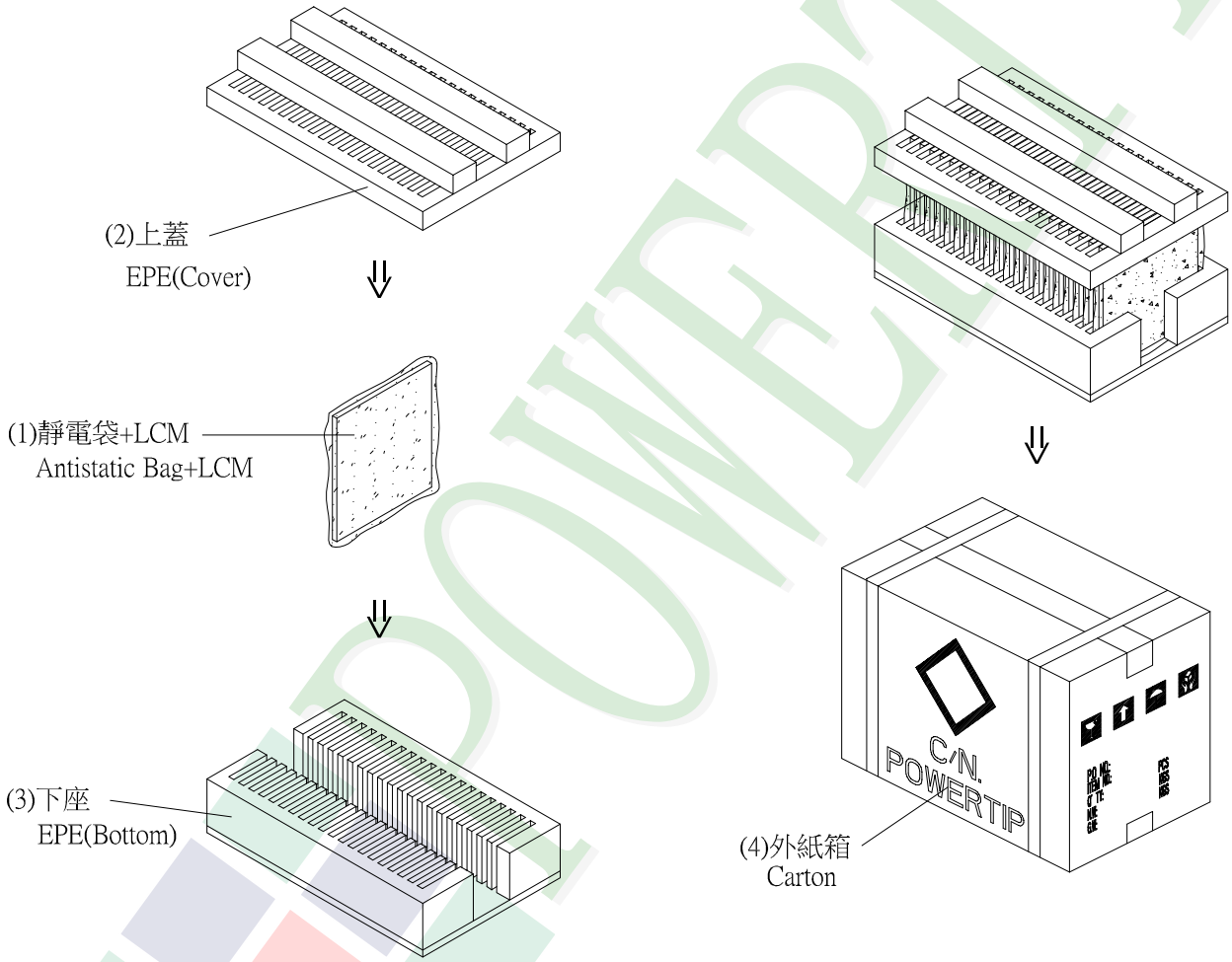

特 記 事 項 (REMARK)

4. 使用供應商原包裝靜電袋。